NOTRE DAME UNIVERSITY BANGLADESH

Project Proposal

Course Title: Microprocessor & Assembly Language Programming Lab

Course Code: CSE 3106

Project Title: Invisible Security System

Batch: CSE (19+20)

Submitted by:

Sazzad Jelani **ID: 0692220005101003**

Nafisa Tabassum **ID: 0692220005101008**

Sadia Islam Mim **ID: 0692220005101010**

Istiak Alam (CSE 20) **ID: 0692230005101005**

Submitted to:

Dr. Shaheena Sultana
Professor & Chair, NDUB

Project Title:

Invisible Security System.

Objective:

Our objective behind making "Invisible Security System" project is to design and implement a laser-based security system to monitor and secure entry points. This system will mainly detect unauthorized access by detecting interruptions in the laser beam, triggering an alarm.

Motivation:

- Enhanced Security: This laser-based system will offer an invisible layer of security that is difficult to detect for unknown entries.
- Cost-Effective: Compared to conventional security systems like cameras or motion sensors, a laser-based system can be more affordable while providing reliable protection for valuable assets.
- Expandability: The project will allow easy customization and scaling, making it suitable for various applications, such as museums or warehouses.
- Learning execution: This project will allow us to apply knowledge of microprocessors, sensors, and embedded systems, designing practical objects.

Components:

1. Arduino UNO
2. Laser Module
3. LDR
4. Connecting Wires
5. Breadboard
6. 5V Power Supply
7. Resistance
8. Buzzer

Circuit Diagram:

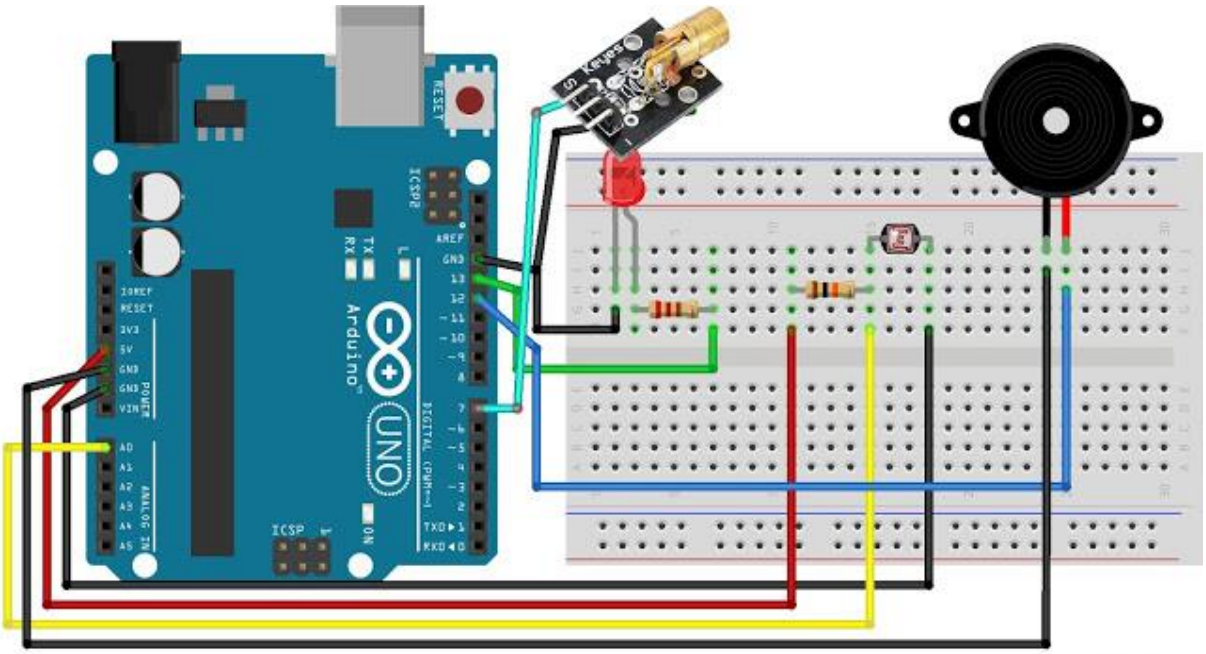

Figure 1:Circuit Diagram

Project Explanation:

- Laser module will emit focused, continuous beam of light.
- The beam of light on hitting the fixed object will get reflected back into the device having the Light Dependent Resistor (LDR), which will act like a detector.
- The LDR will be connected to a microcontroller (Arduino UNO) that will continuously monitor the light intensity received by the LDR. Under normal conditions, the LDR receives the laser beam uninterrupted, and the microcontroller records this steady state.
- The detector will continuously measure the light falling on it after reflection using microcontroller.
- When the security system is idle with no one coming into the path of the light beam, there will always be the same amount of light coming to the detector.
- When any unauthorized presence will come in the path of the light beam, the path of light will get disturbed and the amount of reflected light falling on the detector will get altered.
- On noticing the change in the falling light, the detector will consider it as an intrusion attempt and will activate the buzzer. Sound of the buzzer will notify the authority.